features

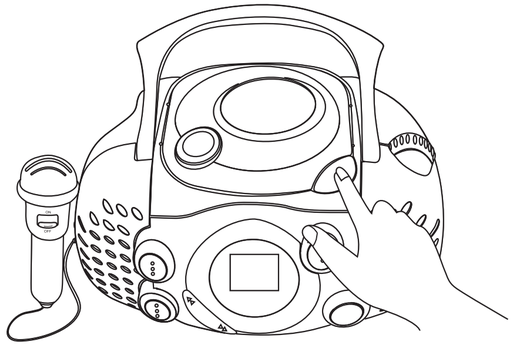

CAUTION:
Never touch the lens.
Never look directly at the lens.

TO INSERT CD
1. Push the OPEN key to open the disc lid.
2. Load the CD into the CD compartment with the label side facing up.
3. Press and locate the CD into position properly.
4. Close the lid.

TO PLAY CD
1. Turn the volume knob to switch the power on.
2. When the word "load" displays and flashes on the LCD screen, the player will start to read and play the CD automatically.
3. In case the CD player does not play, please see troubleshooting solutions.

LCD Display Troubleshooting
1) Disc does not load nor read:
- The CD door is not closed properly; close the CD door properly.
2) No Disc is located:
- The disc is not located properly; locate the disc properly.

TO REMOVE CD
1. Press the STOP button.
2. After the CD stops spinning completely, push the OPEN button to open the lid of CD compartment.
3. Remove the CD from the compartment.

OTHER OPERATIONS/FUNTIONS

PLAY/ PAUSE
In playing status, press the PLAY/PAUSE key to pause. Press it again to resume playing. In Stop or Program status, press the PLAY/PAUSE key to play the CD

F. BACK / B. SKIP
- Press the F. BACK / B. SKIP key once to skip to the previous track.
- Press and hold the F. BACK / B. SKIP key to go backwards quickly.

F. FWD / F. SKIP
- Press the F. FWD / F. SKIP key once to skip to the next track.
- Press and hold the F. FWD / F. SKIP key to go forward quickly.

STOP
- In playing / programming status, press the STOP button to stop playing / programming.

P. MODE
Press the P. MODE button to chose one of the following playing modes:

Normal: The CD player plays the CD from the current track to the last track in normal order, and then stops automatically.
One: play the current track repeatedly.
All: play all tracks in normal order repeatedly.

BUILT-IN ANTI-SHOCK: For shock proof function.

TO PROGRAM TRACKS
1. In Stop status, press the SET button.
2. Then press F. BACK / B. SKIP or F. FWD / F. SKIP key to choose a track.
3. Press the SET button again.
4. Repeat steps 2 - 3 until you have picked all your favourite songs.
5. Press PLAY/PAUSE button to play your programmed tracks.
Note: Once the STOP button is pressed or if the player is turned off, the programmed songs will be lost.

PLAYING WITH SING-ALONG MICROPHONE
1. Switch ON the CD player to play the CD
2. Turn on the Sing-along microphone and adjust the volume to a comfortable level.
3. Sing into the microphone along with the songs.

FOR A/C OPERATION
Use an external transformer (not included) with DC ⎓ 9V max. 700mA, press the plug into DC jack.

Note:
The toy must only be used with the recommended transformer.
The transformer is not a toy.

Toys liable to be cleaned with liquid are to be disconnected from the transformer before cleaning.
The transformer used with the toy should be regularly examined for damage to the cord, plug, enclosure and other parts; in the event of such damage, the toy must not be used with this transformer until the damage has been repaired.

The toy is not intended for children under 3 years old.
Please retain this information for future reference.
Use under adult supervision due to long cord.

sing-a-long CD player
instructions

113618 0306
Early Learning Centre®
Swindon SN3 4TJ England.

Customer Service Department
08705 352352

features

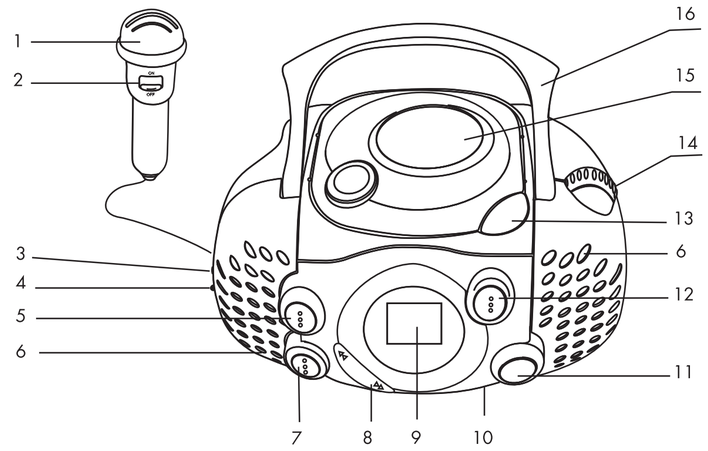

1. Microphone
2. Mic.On/Off Switch
3. DC Jack
4. Mic Jack
5. Set key
6. Speaker
7. P.Mode key
8. F.Back / B. Skip & F. Fwd / F. Skip
9. LCD Display
10. Battery compartment
11. Play & Pause key
12. Stop key
13. Open key
14. Volume control (On/Off) knob
15. Disc Compartment
16. Carry handle

SKU no. 113618
Name sing-a-long CD player
Buying team M&L
Designer James
Date created 31.03.06
K
AW06